INDUSTRY PROCESS
AND AUTOMATION SOLUTIONS

BONFIGLIOLI VECTRON

Braking Resistors



GB

BONFIGLIOLI

Braking Resistors

Introduction

When speed of an inverter-controlled ac motor is reduced, the motor acts as a generator, feeding back energy to the frequency converter. As a result, voltage in the intermediate circuit of the inverter increases. When a specific threshold is exceeded, the energy must flow to an external braking system in order to avoid drive failures. Braking resistors are designed to absorb such energy and to dissipate it into heating. The use of brake resistors allows drives to fulfil the requirements of particularly severe duty cycles, for example those featured by frequent braking, long lasting braking or impulsive braking.

Bonfiglioli resistors

Bonfiglioli Vectron offers a wide range of safe and compact braking resistors with IP20 degree of protection: "BR series".
BR series are designed for panel mounting.
Mostly, they are equipped with built-in thermal protection.
BR models have been thoroughly tested with Bonfiglioli frequency converters, therefore they can be used together with all Active, Synplus, and VCB models.

Drive power supply (V)	Size – Model		Bonfiglioli braking resistor	Resistance, rated power*	Continuous rated power (W)	Max supply voltage (V)	Thermal protection
230	1		BR 160/100	1,6kW 100ohm	160	500	N
	3		BR 432/37	4,3kW 37ohm	432	500	N
	4		BR 667/24	6,7kW 24ohm	667	500	Y
	5		BR 1333/12	13,3kW 12ohm	1333	500	Y
400	2		BR 213/300	2,1kW 300ohm	213	900	N
	3		BR 471/136	4,7kW 136ohm	471	900	N
	4		BR 696/92	6,9kW 92ohm	696	900	Y
	5		BR 1330/48	13,3kW 48ohm	1330	900	Y
	6	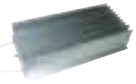	BR 2000/32	20kW 32ohm	2000	900	Y
	7		BR 4000/16	40kW 16ohm	4000	900	Y
	8		BR 8000/7	80kW 7,5ohm	8000	900	Y

* Rated power is calculated on the basis of intermittent use with a duty cycle of 10%.

Braking Resistors

Selecting the right size

Correct selection of a resistor within BR series should take into account the actual braking function of application, both in terms of intensity and of frequency.
Bonfiglioli proposes two different approaches for selection:

1. Below charts show easy drive-resistor combinations granting at least 10% duty cycle (with the exception of some sizes in the VCB range). These combinations usually accomplish the needs of the majority of applications
2. In case of processes requiring "unusual" duty cycles, with heavy or frequent braking, selection should be "tailored" to the application. The Drive Service Center of your Bonfiglioli subsidiary has got qualified staff available to perform a detailed analysis of your application and detect most suitable resistor to meet your requirements.







Bonfiglioli Vectron product combination charts

The charts show recommended matches of Bonfiglioli brake resistors Vs. each drive of the ranges Active, Synplus and VCB. Duty cycles listed in last columns of charts are calculated assuming that resistor is absorbing 100% of drive power. Contact your nearest Bonfiglioli Drive Service Center for any doubt, or in case customization is required.

ACTIVE Series	kW	Bonfiglioli braking resistor	Duty cycle* at the drive's rated power
ACT 201-05	0,55	BR 160/100	**29%**
ACT 201-07	0,75	BR 160/100	**21%**
ACT 201-09	1,1	BR 160/100	**15%**
ACT 201-11	1,5	BR 432/37	**29%**
ACT 201-12	2,2	BR 432/37	**20%**
ACT 201-15	3	BR 432/37	**14%**
ACT 201-18	4	BR 667/24	**17%**
ACT 201-19	5,5	BR 667/24	**12%**
ACT 201-21	7,5	BR 1333/12	**18%**
ACT 201-22	9,2	BR 1333/12	**14%**
ACT 401-05	0,55	BR 213/300	**39%**
ACT 401-07	0,75	BR 213/300	**28%**
ACT 401-09	1,1	BR 213/300	**19%**
ACT 401-11	1,5	BR 213/300	**14%**
ACT 401-12	1,85	BR 471/136	**25%**
ACT 401-13	2,2	BR 471/136	**21%**
ACT 401-15	3	BR 471/136	**16%**
ACT 401-18	4	BR 696/92	**17%**
ACT 401-19	5,5	BR 1330/48	**24%**
ACT 401-21	7,5	BR 1330/48	**18%**
ACT 401-22	9,2	BR 1330/48	**14%**
ACT 401-23	11	BR 2000/32	**18%**
ACT 401-25	15	BR 2000/32	**13%**
ACT 401-27	18,5	BR 4000/16	**22%**
ACT 401-29	22	BR 4000/16	**18%**
ACT 401-31	30	BR 4000/16	**13%**
ACT 401-33	37	BR 8000/7	**22%**
ACT 401-35	45	BR 8000/7	**18%**
ACT 401-37	55	BR 8000/7	**15%**
ACT 401-39	65	BR 8000/7	**12%**

SYNPLUS Series	kW	Bonfiglioli braking resistor	Duty cycle* at the drive's rated power
SPL200 03F	0,4	BR 160/100	**40%**
SPL200 07F	0,75	BR 160/100	**21%**
SPL200 11F	1,5	BR 160/100	**11%**
SPL200 13F	2,2	BR 432/37	**20%**
SPL400 07F	0,75	BR 213/300	**28%**
SPL400 11F	1,5	BR 213/300	**14%**
SPL400 13F	2,2	BR 471/136	**21%**
SPL400 17F	3,7	BR 696/92	**19%**
SPL400 19F	5,5	BR 696/92	**13%**
SPL400 21F	7,5	BR 1330/48	**18%**
SPL400 23F	11	BR 2000/32	**18%**

VCB 400 Series	kW	Bonfiglioli braking resistor	Duty cycle* at the drive's rated power
VCB 400-060	30	BR 4000/16	**13%**
VCB 400-075	37	BR 4000/16	**11%**
VCB 400-090	45	BR 4000/16	**9%**
VCB 400-115	55	BR 4000/16	**7%**
VCB 400-135	65	BR 4000/16	**6%**
VCB 400-150	75	BR 8000/7	**11%**
VCB 400-180	90	BR 8000/7	**9%**
VCB 400-210	110	2x BR 8000/7	**15%**
VCB 400-250	132	2x BR 8000/7	**12%**

* The duty cycle refers to a period of 120 seconds.

Dimensions

Sizes 1 and 2

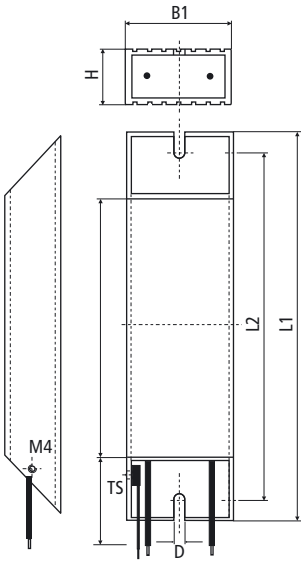

Sizes 3 and 4

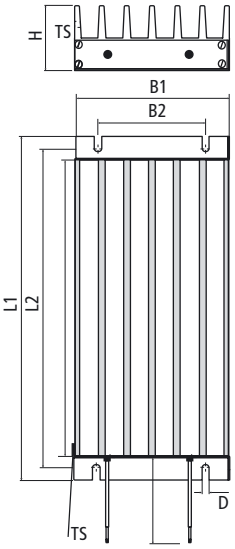

Sizes 5 and 6

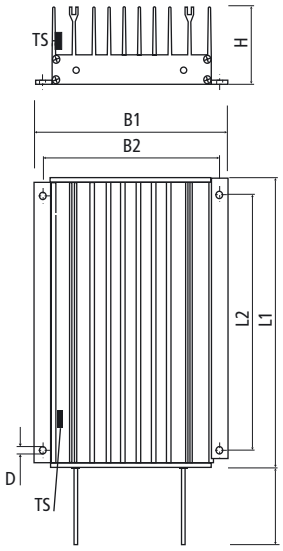

Size 7

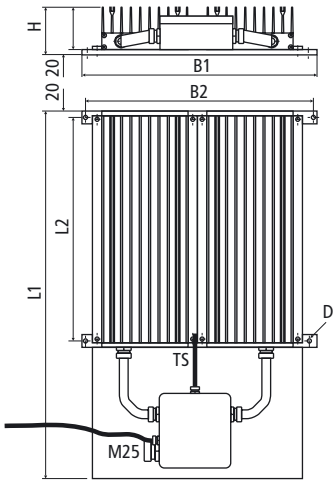

Size 8

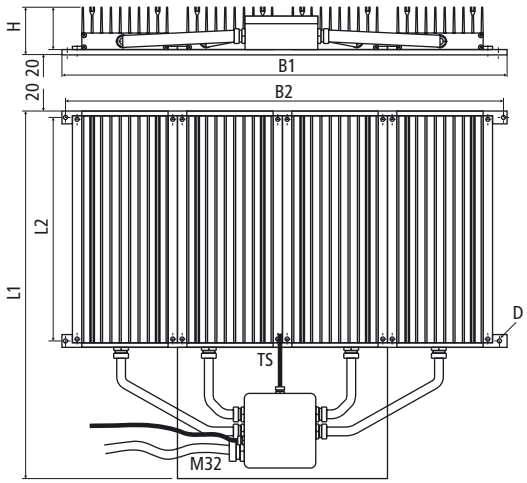

Bonfiglioli braking resistor	Size	Dimensions			Fixing holes			Cable section	Weight
		B1	H	L1	B2	L2	D		kg
BR 160/100	**1**	40	21	210	-	195	5,5	2xAWG 14, UL 1659	0,35
BR 432/37	**3**	103	50	230	70	215	4,5	2xAWG 14, UL 1659	1,4
BR 667/24	**4**	103	50	300	70	285	4,5	2xAWG 14, UL 1659	1,8
BR 1333/12	**5**	175	75	330	165	280	6,5	2xAWG 14, UL 1659	4,5
BR 213/300	**2**	40	21	250	-	235	5,5	2xAWG 14, UL 1659	0,45
BR 471/136	**3**	103	50	230	70	215	4,5	2xAWG 14, UL 1659	1,35
BR 696/92	**4**	103	50	300	70	285	4,5	2xAWG 14, UL 1659	1,8
BR 1330/48	**5**	175	75	330	165	280	6,5	2xAWG 14, UL 1659	4,5
BR 2000/32	**6**	175	75	530	165	500	6,5	2xAWG 14, UL 1659	6,9
BR 4000/16	**7**	410	95	690	380	500	8,5	Terminal Box	16,5
BR 8000/7	**8**	770	95	750	740	500	8,5	Terminal Box	31,5

Note: For more detailed information please contact your nearest Bonfiglioli Vectron Drive Service Centre.

HEADQUARTERS
BONFIGLIOLI RIDUTTORI S.p.A.
Via Giovanni XXIII, 7/A
40012 Lippo di Calderara di Reno
Bologna (ITALY)
Tel. (+39) 051 6473111
Fax (+39) 051 6473126
www.bonfiglioli.com
bonfiglioli@bonfiglioli.com